CXA1081

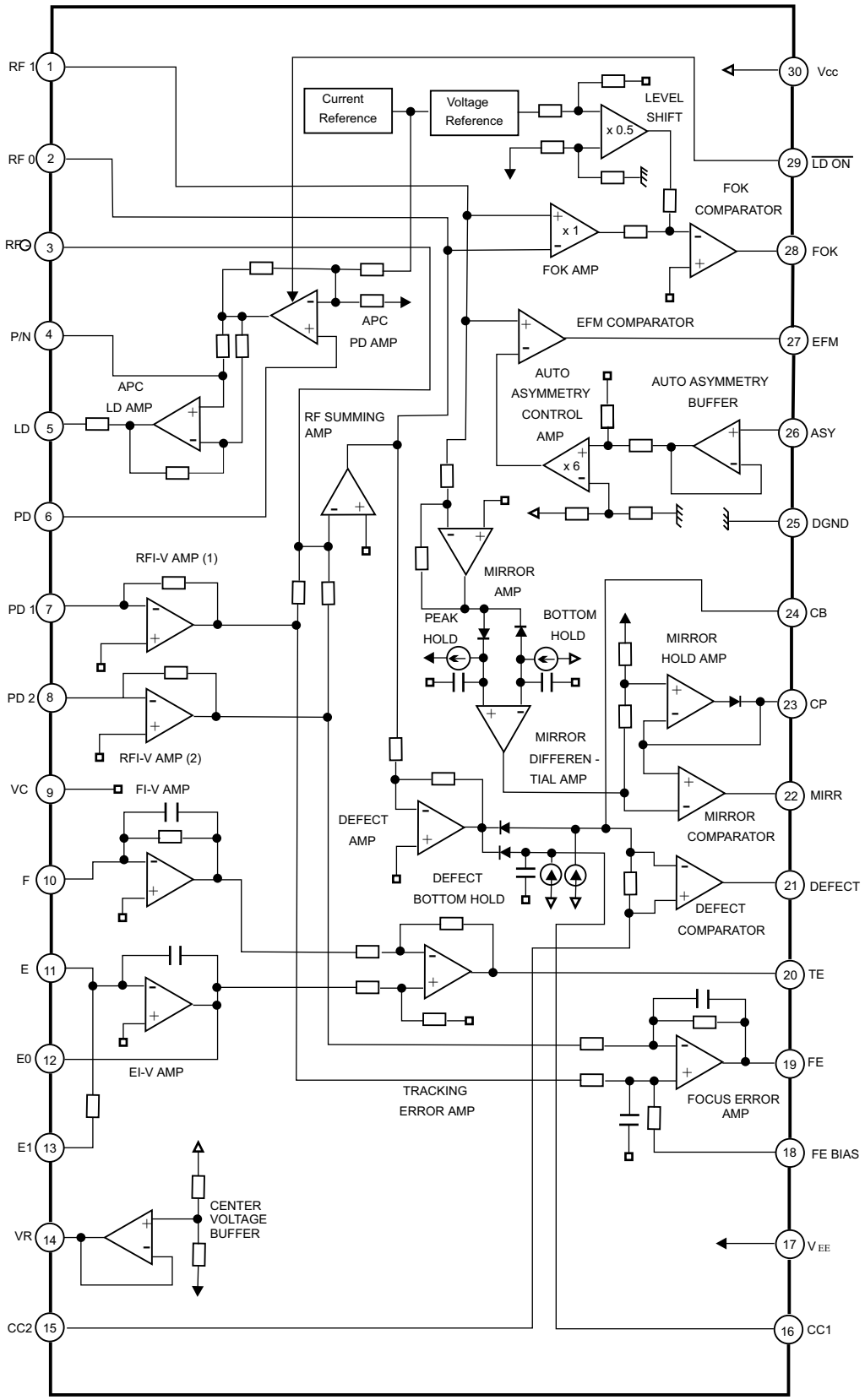
RF 1
RF 0
RFO
P/N
LD
PD
PD 1
PD 2
VC
F
E
E0
E1
VR
CC2
Vcc
LD ON
FOK
EFM
ASY
DGND
CB
CP
MIRR
DEFECT
TE
FE
FE BIAS
V EE
CC1
Current Reference
Voltage Reference
LEVEL SHIFT
x 0.5
FOK COMPARATOR
x 1
FOK AMP
APC PD AMP
EFM COMPARATOR
AUTO ASYMMETRY CONTROL AMP
AUTO ASYMMETRY BUFFER
x 6
APC LD AMP
RF SUMMING AMP
MIRROR AMP
RFI-V AMP (1)
PEAK HOLD
BOTTOM HOLD
MIRROR HOLD AMP
RFI-V AMP (2)
MIRROR DIFFEREN - TIAL AMP
FI-V AMP
DEFECT AMP
MIRROR COMPARATOR
DEFECT BOTTOM HOLD
DEFECT COMPARATOR
EI-V AMP
TRACKING ERROR AMP
FOCUS ERROR AMP
CENTER VOLTAGE BUFFER